DIGITALLY PRINTED 17’ FLAT TABLE SKIRT

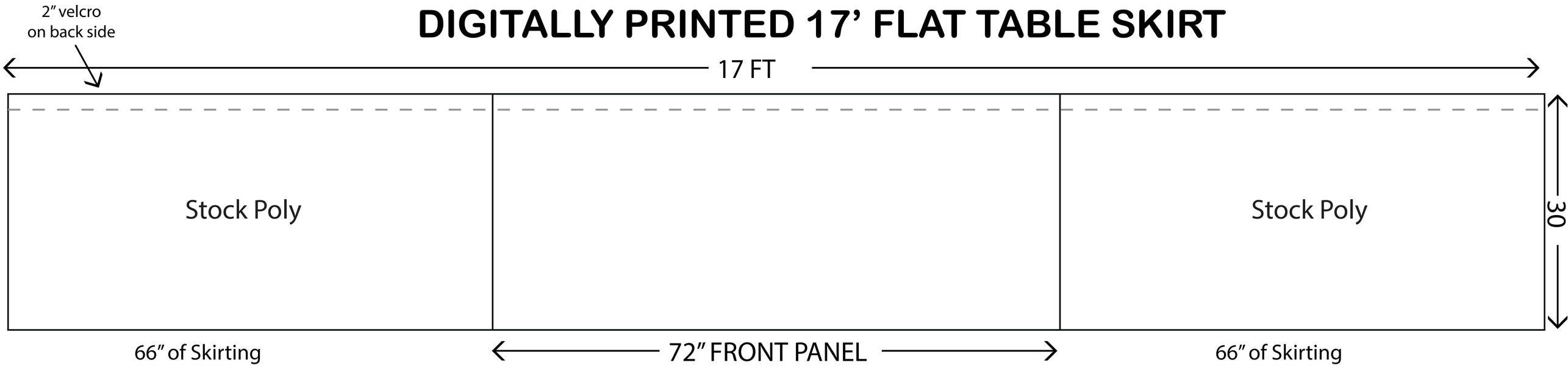

Imprint Area: Front panel
Cloth Color: _____ poly
Qty: __
Graphic Size: _____ ”L x _____ ”H

PMS ????
PMS ????
Match Stock Poly

Order# _____
Date: _____
Layout Creator: __

This product is being printed digitally in 4 color process (CMYK). PMS numbers are used as a reference point and colors will be matched as close as the 4 color process can achieve, however it is not always an exact match. The front panel is dye-sublimated to match the stock poly color chosen. Some variation between the tablecloth color and the printed panel should be anticipated, however when the cloth is placed on a table it is not seen as a noticeable difference. Do not expect the finished product to look like the colors displayed on your computer monitor. Reference a PMS book for graphic colors and if an exact fabric color is critical be sure to look at a physical swatch of the fabric. If PMS numbers are not called out and the proof is approved on CMYK values only we will not accept returns for color discrepancies. It is recommended that PMS colors be assigned to spot color elements or a physical “match print” be provided if color is critical.