4’x30”x42”
Maxi Print

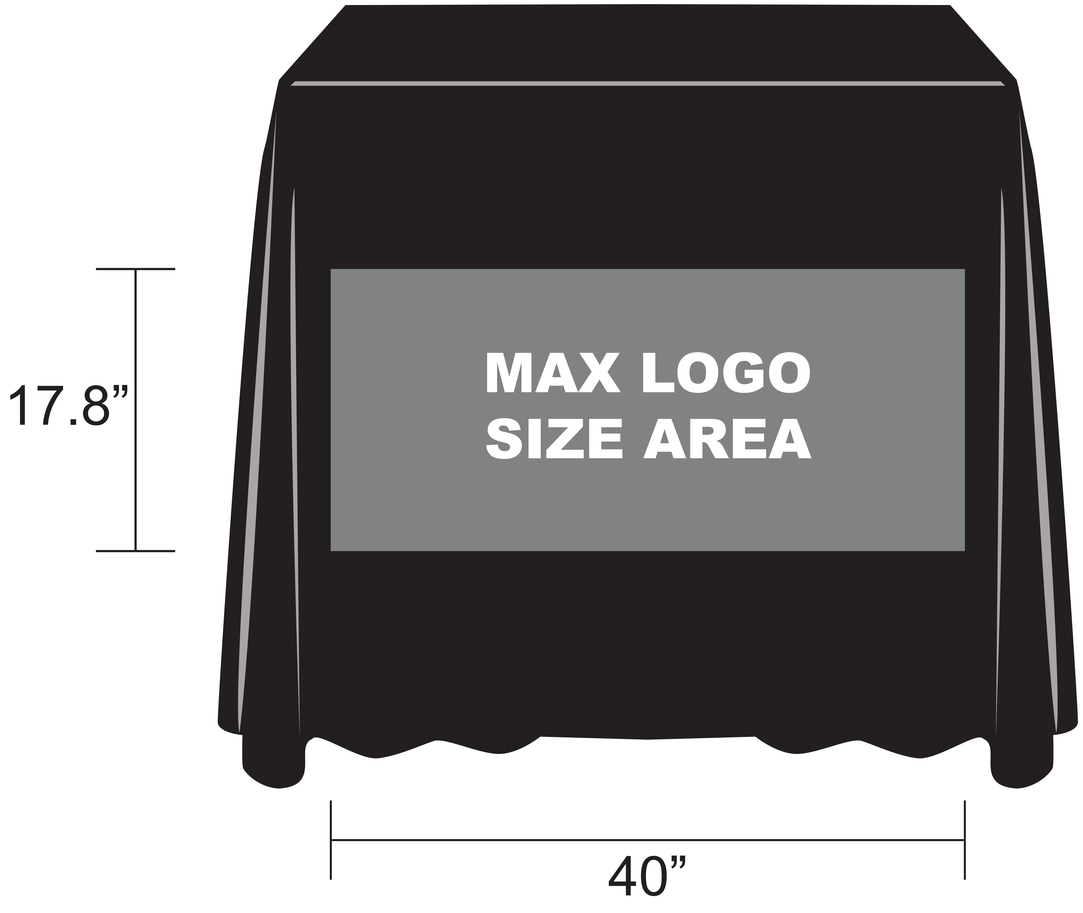

-MAX LOGO SIZE: 44”x17.8”
-VECTOR ART IS REQUIRED FOR MAXI PRINT
-INK MAY BLOB TOGETHER OR NOT SHOW UP WHEN TEXT AND OBJECTS ARE BELOW 2 POINTS.

Colors:

- 4 colors max
- Pantone Plus Solid Coated
- Metallic Colors Available

Objects Below 2 Points

Example of a 2 Point Line

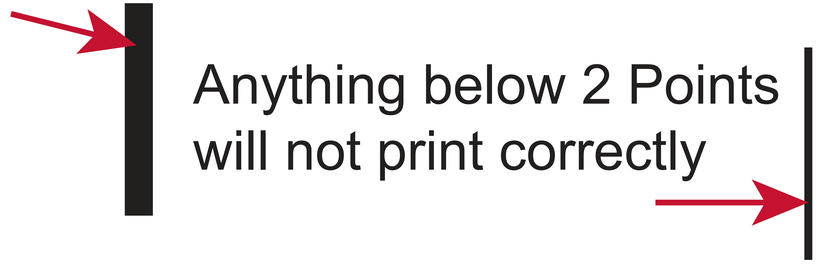

*Line not actually at 2 points, shown for representation only