# Throw Cover 8′ Fitted

## Graphic Template

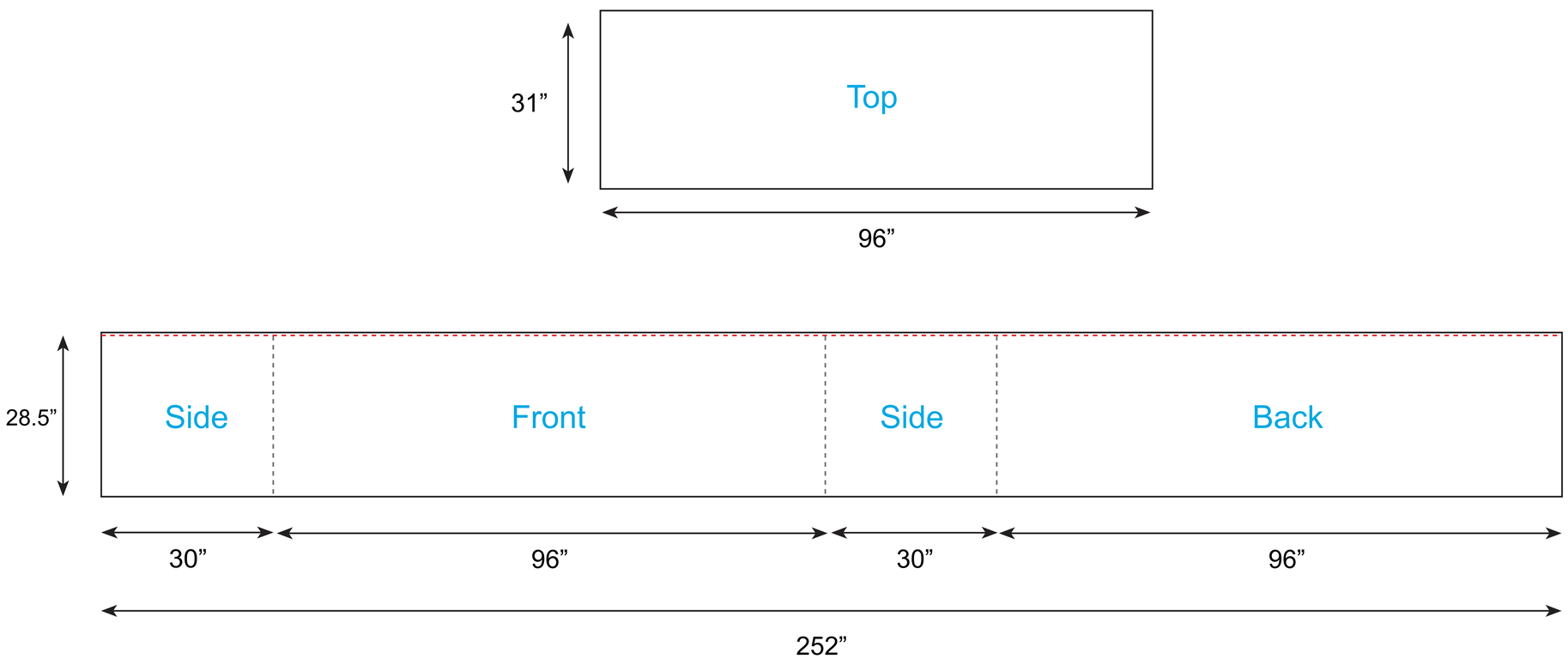


**50% Scale**

## ART SIZE

**Imprint Area:**
With Bleed

See Diagram

**Visual Area:**

96”x28”h, 30”x28”h & 96”x30”

## ART GUIDELINES

- **Image Resolution 100 dpi (at print size)**
- **Convert all fonts to outlines**
- **Outline all strokes**
- **Embed all placed images**
- **Specify PMS colors**
- **Please keep logos and text away from the edges and seams**

**Preferred File Formats:**

Adobe Illustrator (AI, EPS, PDF)

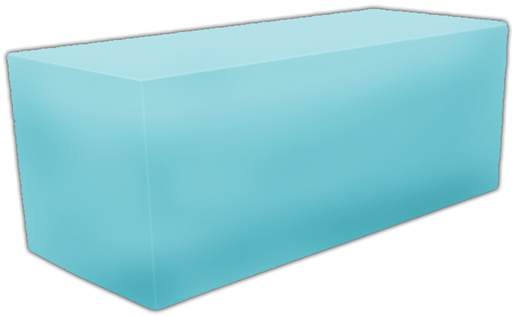

**Always download the most recent template from our website for EACH job submitted to ensure an exact fit. Use of outdated templates may result in production delays.**