Throw Cover 8′ Pleated Econ

Graphic Template

50% Scale

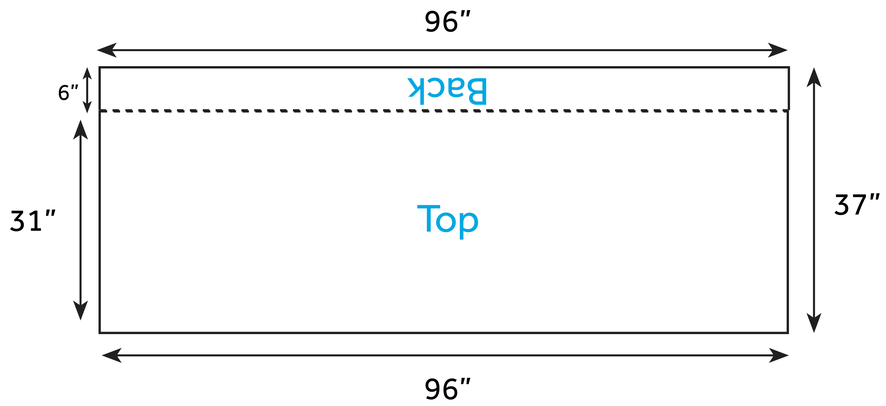

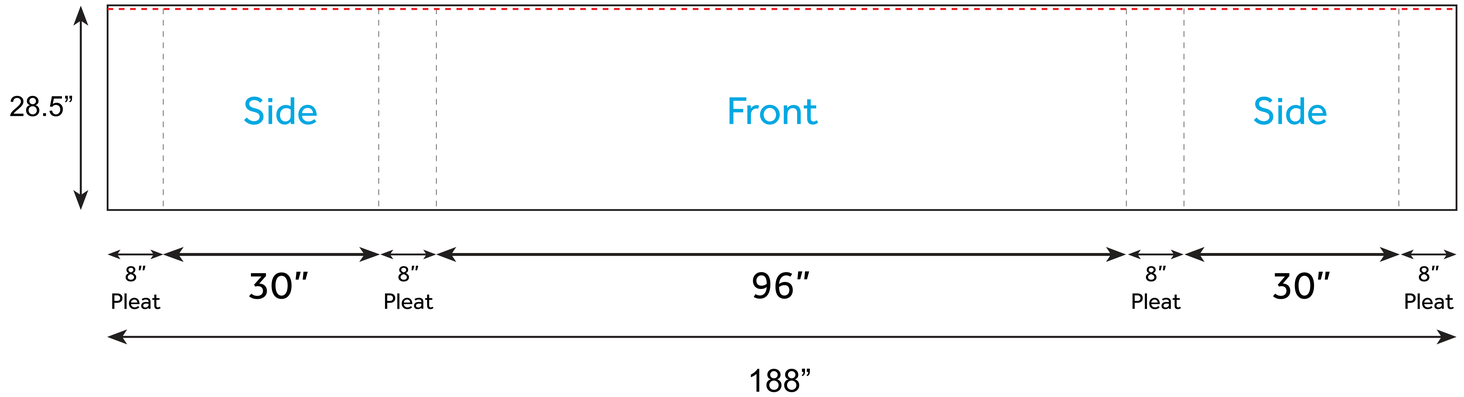

ART SIZE

Imprint Area:
With Bleed

See Diagram

Visual Area:

96″x28″h, 30″x28″h & 96″x30″

ART GUIDELINES

- **Image Resolution 100 dpi (at print size)**
- **Convert all fonts to outlines**
- **Outline all strokes**
- **Embed all placed images**
- **Specify PMS colors**
- **Please keep logos and text away from the edges and seams**

Preferred File Formats:

Adobe Illustrator (AI, EPS, PDF)

Always download the most recent template from our website for EACH job submitted to ensure an exact fit. Use of outdated templates may result in production delays.