formulate

VERTICAL CURVE 4

Total Graphic Area: 118"w X 98.5"h
Total Visual Area: 114"w X 94.5"h

Please be sure to include the 2" bleed around the perimeter (note trim & stitch locations on template). Do not design any critical elements (text, logos, etc.) within 2" of the edge.

Header:
Total graphic area: 48.25"w X 12.8125"h
Total visual area: 47.25"w X 11.8125"h

Use separate template for header panel. It only represents placement on this template.

Please be sure to include the 1/2" bleed around the perimeter to compensate for the finishing of the rigid sintra graphics.

Use separate template for ladder graphic panels. They only represent placement on this template.

Please consider obstructions such as shelf unit & header etc. when laying out your graphics.

The shelf unit can be mounted on the left or right side of the frame.
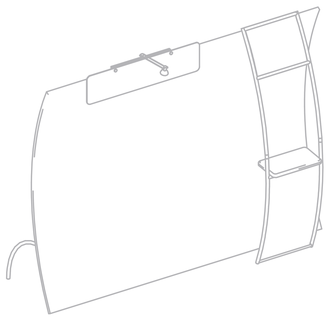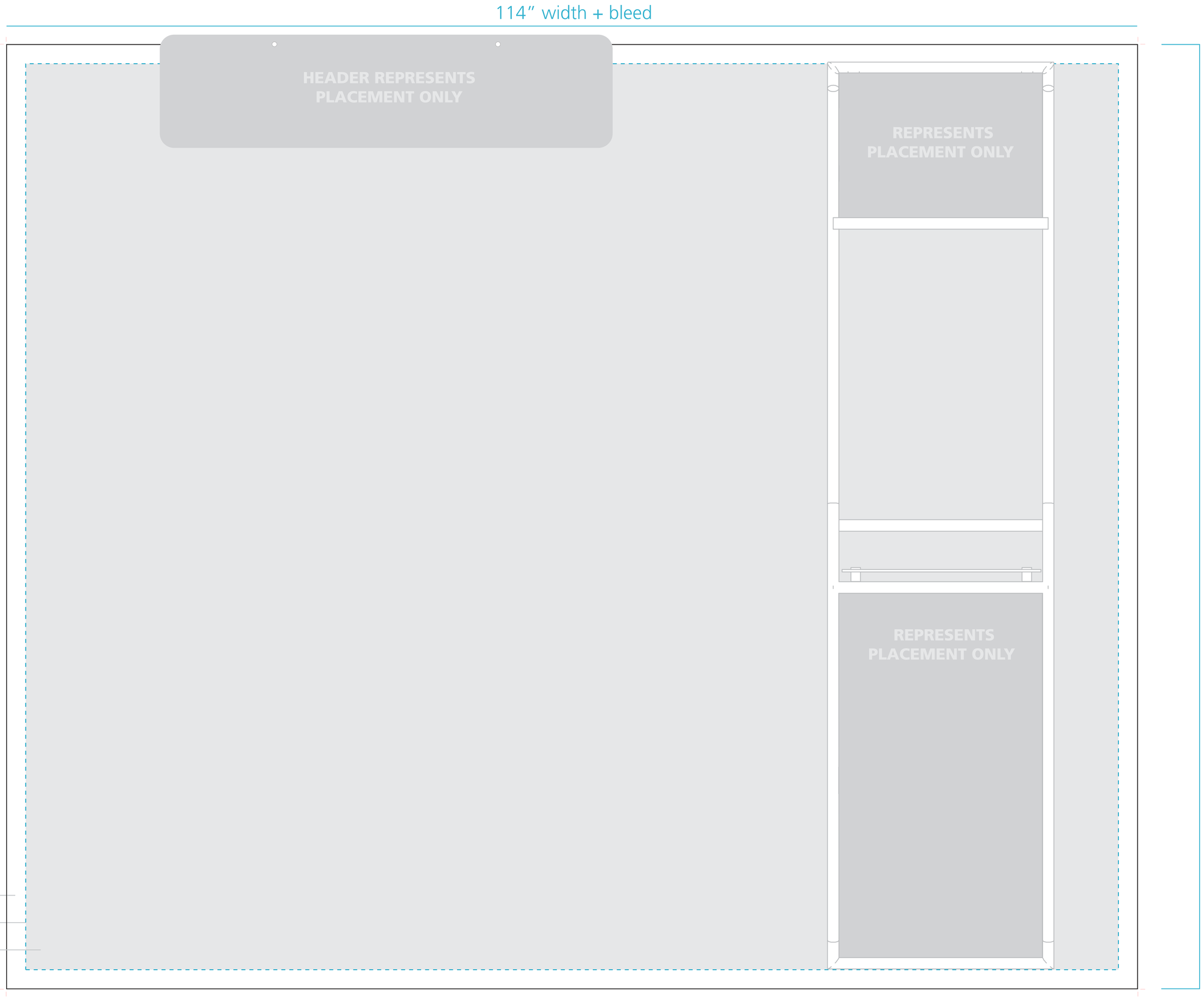
General Artwork Guidelines
- cmyk color mode
- do not embed images, supply them
- resolution must be 100-120 ppi
- all fonts must be created to outlines