Backwall Connector

BACKWALL CONNECTOR

Total graphic area: 52"w X 95.5"h
Total visual area: 48"w X 91.5"h
(1) Print creates structure

GRAPHIC CODES

WBWC-01 - Single sided
Backwall Connectors have front printed only
Total graphic area: 52"w X 95.5"h
Total visual area: 48"w X 91.5"h

Please be sure to include the 2" bleed around the perimeter to compensate for the finishing of the graphics. Do not design any critical elements (text, logos, etc.) within 1" of the edge (see dotted lines).

General Artwork Guidelines
- cmyk color mode
- do not embed images, supply them
- resolution must be 100-120 ppi
- all fonts must be created to outlines

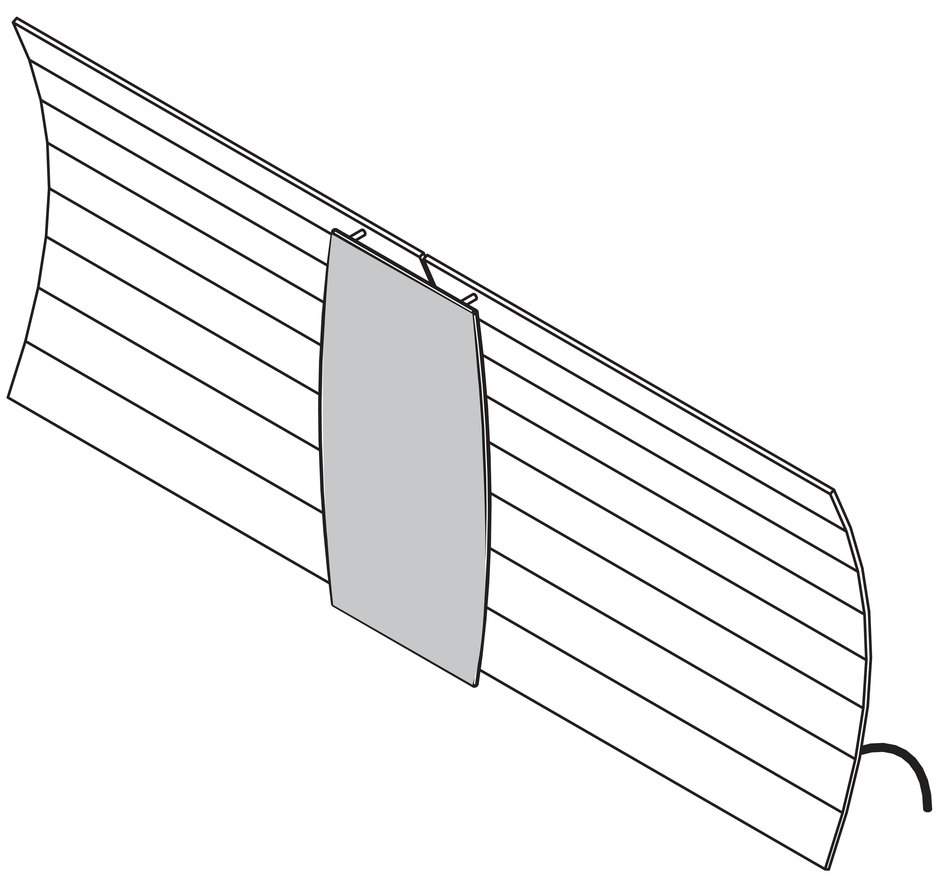

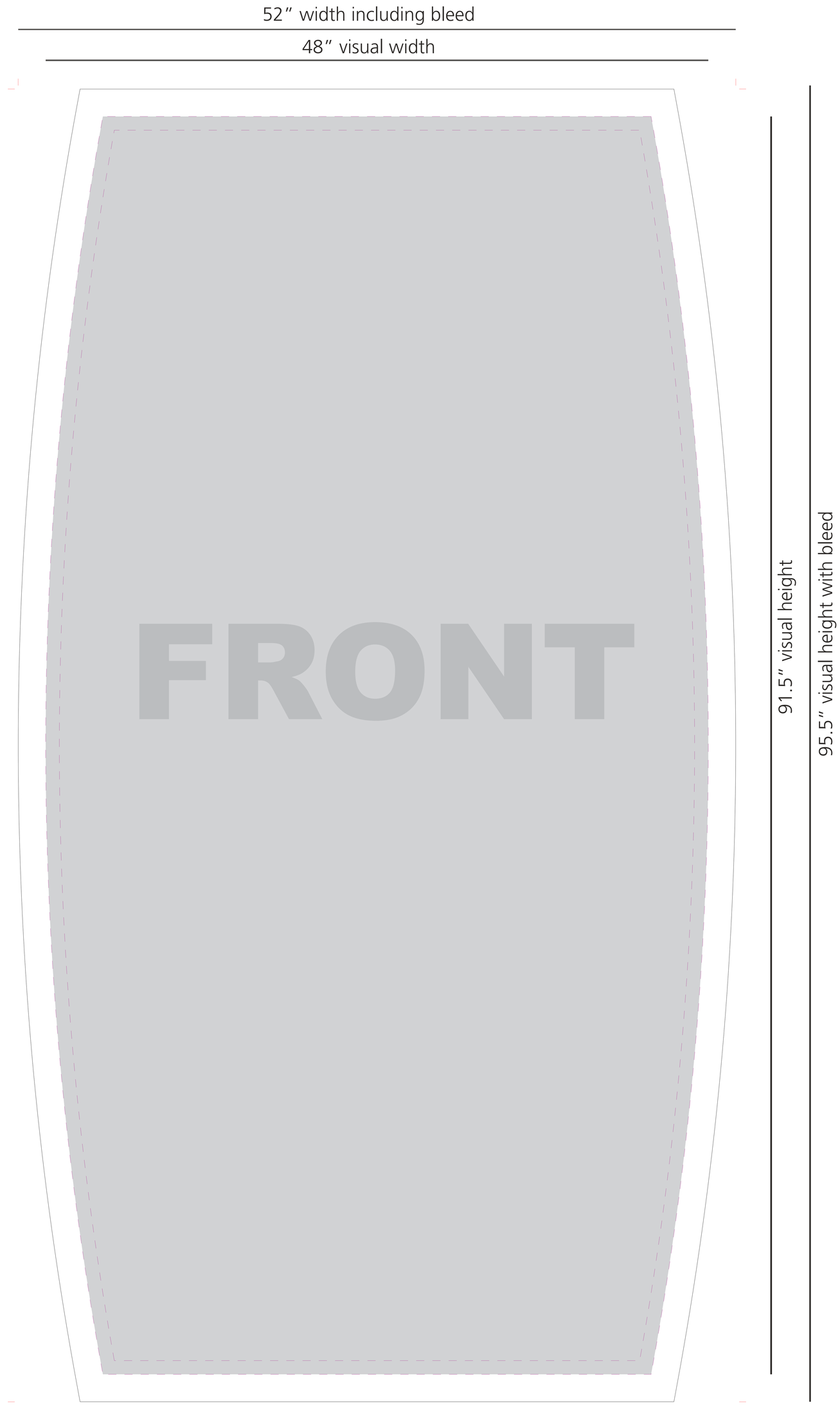

Design Here if ordering WBWC-01-G

FRONT