Linear Tabletop BB

Center Graphic:
Total Size: 47"w X 43"h
Trim Size: 46"w X 42"h

Left & Right Wings:
Total Size: 13"w X 43"h
Trim Size: 12"w X 42"h

Header:
Total Size: 46"w X 12"h
Trim Size: 45"w X 11"h

All artwork must be supplied with a 1/2" bleed around the perimeter. The red dotted line represents where the graphics will be trimmed.

When the graphics are mounted into the system, there will be no space between the header and the center panel. The aluminum extrusion between the wings and the center panels will take up 2" in width.

To avoid a delay in your ship date & possible extra charges, please use this template to set-up the artwork.

General Art Guidelines:

-CMYK color

-Do not embed images, supply them.

-Resolution between 100 - 120 ppi.
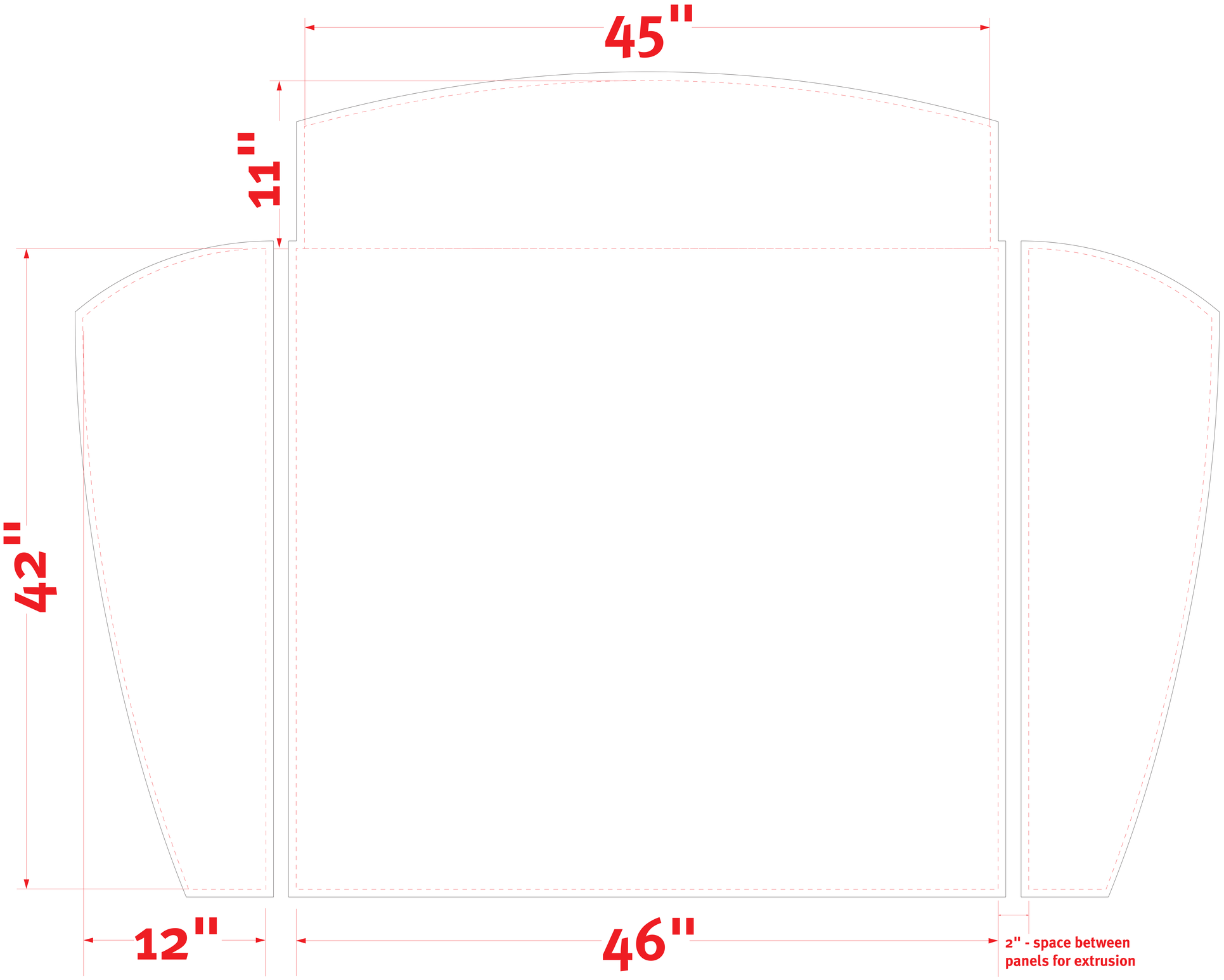
-CONVERT FONTS TO OUTLINES.