223 Counter & Workstation (with internal shelf)

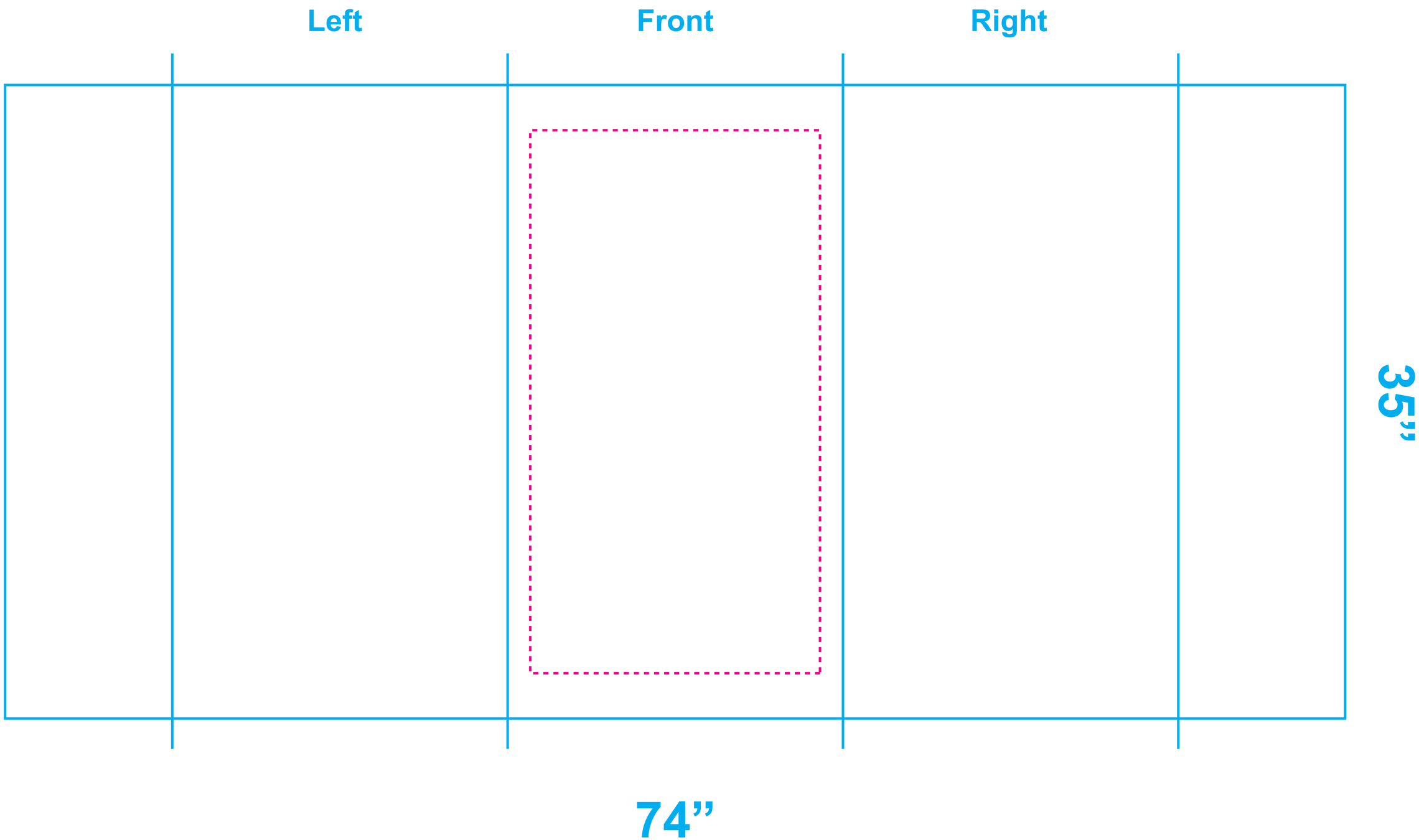

Final Size: 74 x 35
Live Area: 16 x 30
Note: Live area for left & right side same as front
Graphic is sewn together in back