223 Counter & Workstation

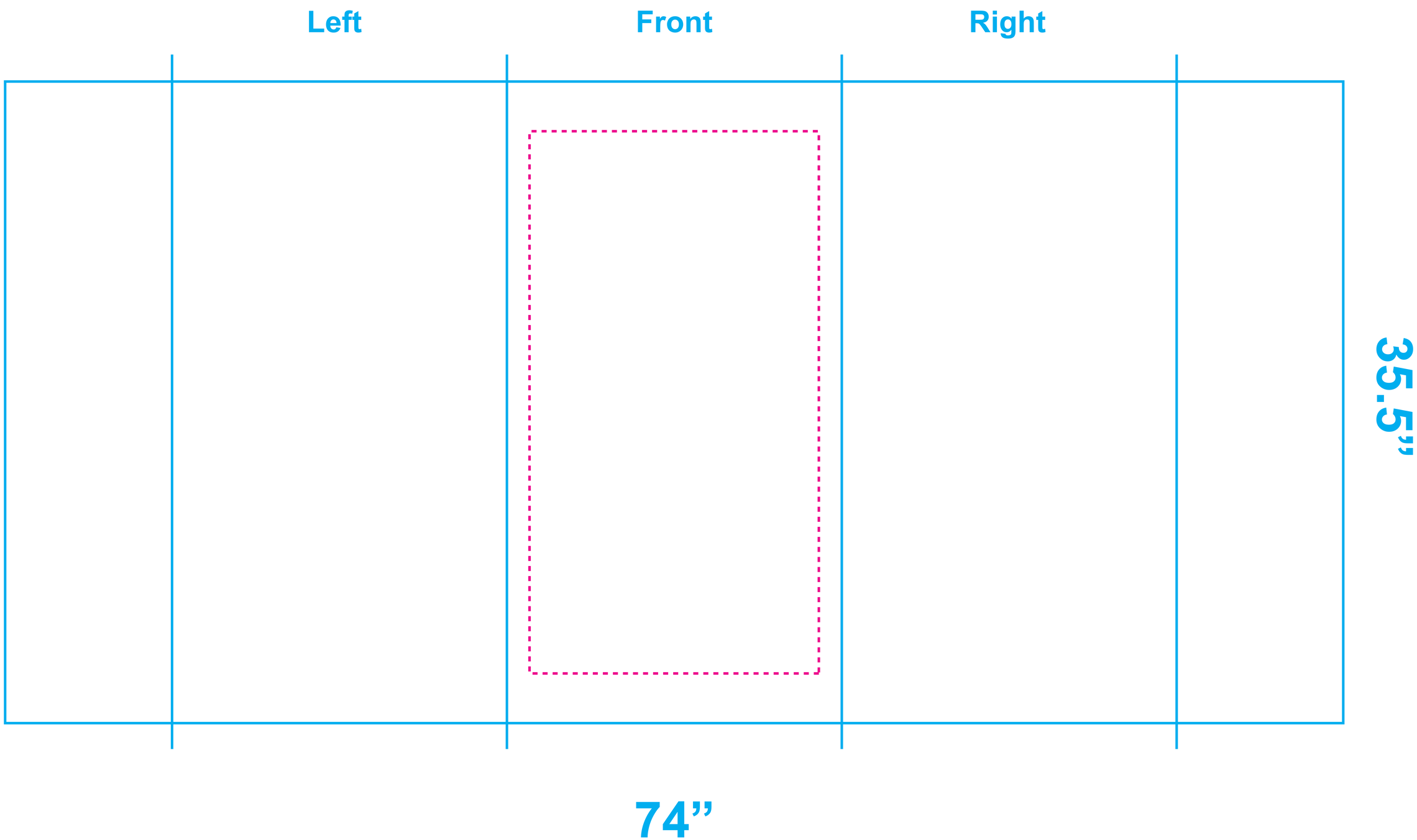

Final Size: 74 x 35.5
Live Area: 16 x 30
Note: Live area for left & right side same as front
Graphic is sewn together in back